1170 DOUBLE FLANGED BUTTERFLY VALVE DIMENSIONAL DRAWING

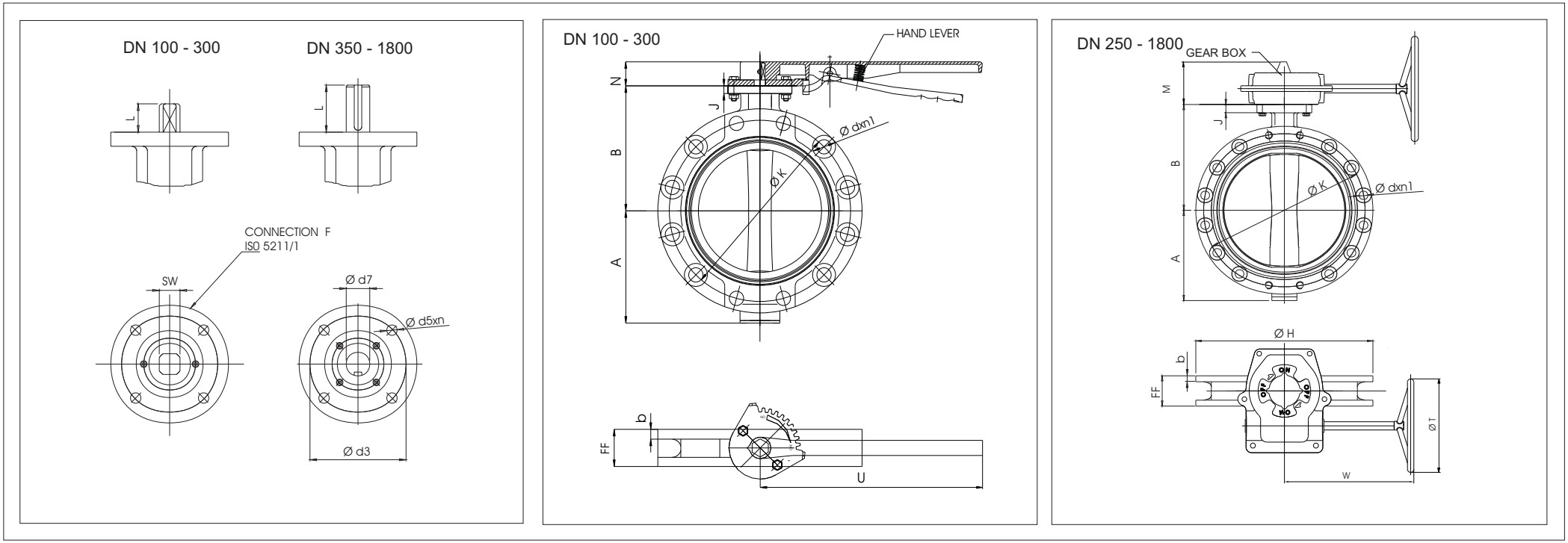

DN	A	B	b	FF	Ø H	J	M	N	U	W	Ø T	F	Ød5xn	□ SW Ø d7	L	Ø d3	PN 10			PN 16			FREE SHAFT	HAND LEVER		GEAR BOX			
																										PN 10		PN 16	
																	Ø K	Ø d	n1	Ø K	Ø d	n1	Weight (kg)	Type	Weight (kg)	Type	Weight (kg)	Type	Weight (kg)
Ø 100	110	155	-	52	220	14	50	37	260	159	200	07	9x4	□ 14	20	70	180	Ø 19	8	180	Ø 19	8	12.0	92-200	0.800	AST-20	2,900	AST-20	2,900
Ø 125	123	158	-	56	250	14	50	37	260	159	200	07	9x4	□ 14	20	70	210	Ø 19	8	210	Ø 19	8	14.0	92-200		AST-20		AST-20	
Ø 150	141	185	-	56	285	14	50	37	350	159	200	07	9x4	□ 17	22	70	240	Ø 23	8	210	Ø 23	8	17.0	92-300	0.900	AST-20		AST-20	
Ø 200	174	213	-	60	340	15	50	37	350	159	200	07	9x4	□ 17	22	70	295	Ø 23	8	295	Ø 23	12	25.0	92-300		AST-20		AST-20	
Ø 250	212	245	22	68	400	15	75	47	400	238	260	10	11x4	□ 22	32	102	350	Ø 23	12	355	Ø 28	12	40.0	92-400	2.600	AST-30	8,220	AST-30	8,220
Ø 300	243	282	24.5	78	455	15	75	47	400	238	260	10	11x4	□ 27	32	102	400	Ø 23	12	410	Ø 28	12	46.0	92-400		AST-30		AST-30	
Ø 350	300	318	26.5	78 / 92	515	28	102	-	-	315	400	14	17.5x4	Ø 36	75	140	460	Ø 23	16	470	Ø 28	16	55.0	-	-	AST-40	12,240	AST-40	12,240
Ø 400	326	362	28	102	575	28	102	-	-	315	400	14	17.5x4	Ø 36	75	140	515	Ø 28	16	525	Ø 31	16	81.0	-	-	AST-40		AST-60	17,900
Ø 450	365	410	30	114	635	26	102	-	-	315	400	16	22x4	Ø 45	92	165	565	Ø 28	20	585	Ø 31	20	140.0	-	-	AST-60	17,900	AST-80	32,660
Ø 500	408	435	31.5	127	710	26	102	-	-	315	400	16	22x4	Ø 45	92	165	620	Ø 28	20	650	Ø 34	20	150.0	-	-	AST-60		AST-80	
Ø 600	482	519	36	154	835	26	102	-	-	315	600	16	22x4	Ø 60	92	165	725	Ø 31	20	770	Ø 37	20	201.0	-	-	AST-80	32,660	AB1950NHR	45,000
Ø 700	564	548	39.5	165	905	32	135	-	-	414	600	25	18x8	Ø 68	118	254	840	Ø 31	24	840	Ø 37	24	292.0	-	-	AB1950NHR	45,000	AB6800NLT/SP4	70,000
Ø 800	587	587	43	180 / 190	1020	35	135	-	-	414	600	25	18x8	Ø 80	118	254	950	Ø 34	24	950	Ø 41	24	365.0	-	-	AB6800NLT/SP4	70,000	AB6800NLT/SP4	
Ø 900	655	661	46.5	190 / 203	1115	35	225	-	-	525	600	30	22x8	Ø 80	200	298	1050	Ø 34	28	1050	Ø 41	28	506.0	-	-	AB6800N/SP4	70,000	AB6800N/SP6	81,000
Ø 1000	718	751	50	216	1255	35	225	-	-	525	600	30	22x8	Ø 100	200	298	1160	Ø 37	28	1170	Ø 44	28	700.0	-	-	AB6800N/SP6	81,000	A250N/SP9	225,000
Ø 1200	985	1005	57	254	1455	40	225	-	-	525	600	30	22x8	Ø 100	200	298	1380	Ø 41	32	1390	Ø 50	32	1.400.0	-	-	A250N/SP9	225,000	IW9RA	262,000
Ø 1400	1017	1030	60	279	1685	60	225	-	-	525	600	40	38x8	Ø 155	200	406	1590	Ø 44	36	1590	Ø 50	36	-	-	-	IW82	222,000	IW9RA	262,000
Ø 1600	1145	1160	65	318	1930	60	225	-	-	525	600	48	38x 12	Ø 160	200	483	1820	Ø 50	40	1820	Ø 57	40	-	-	-	IW11	570.000	IW11	570.000
Ø 1800	1172	1260	70	356	2130	60	225	-	-	525	600	48	38x12	Ø 150	200	483	2020	Ø 50	44	2020	Ø 57	44	-	-	-	IW11	570.000	IW11	570.000

Subject to change without notice,
Please contact us for other sizes.

REV :T

04.03.2016